Slab and Footing Inspections
– what to look for
in accordance with AS2870

BY RICHARD NOONAN, DIRECTOR OF BARNSON PTY LTD

barnson
DESIGN.PLAN.MANAGE

Site Classification
in accordance with AS2870

If soil is encountered during construction that is different to that referred to in the Geotechnical Report, the Design Engineer shall be contacted immediately prior to further work taking place.

Site Drainage

All care should be taken to ensure that adequate site drainage is provided to ensure that water is diverted away from the building during and after construction.

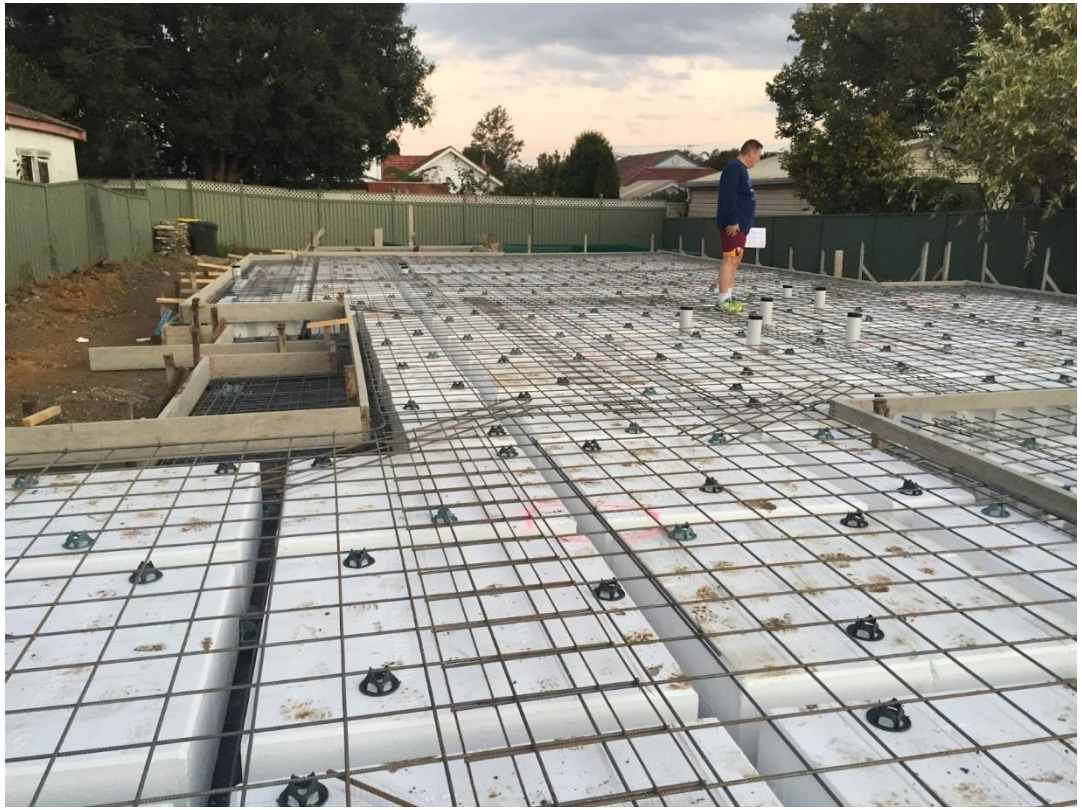

Height Above Ground

For slab on ground, finished slab heights above external finished surfaces must not be less than:

A. 150mm above finished ground level

B. 100mm above sandy, well drained areas

C. 50mm above external sealed areas that have a slope of not less than 50mm over the first 1m from the building

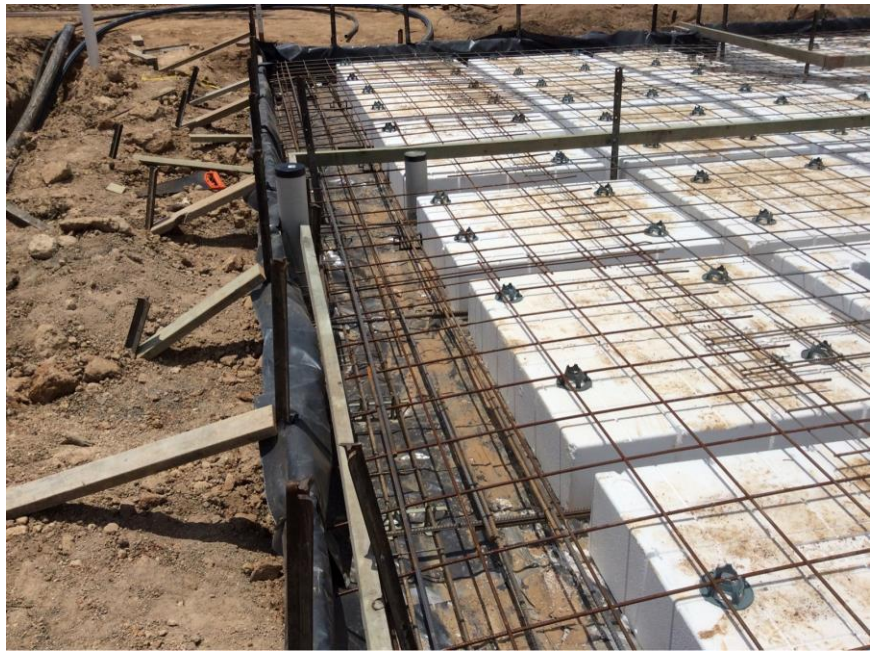

Over Width/Depth Footings

Dimensions given for beams and strip footings are the minimum required as per design principals. If there are site specific requirements to widen, or deepen beams or strip footings, it shall be performed as follows:

A. Where beams or strip footings are wider than that specified, an extra bottom bar, or equivalent of the same bar size is required for each 100mm additional width

B. Where beams or strip footings are deeper than that specified, the bottom reinforcement specified in AS2870 for the greater beam or strip footing depth is to be used

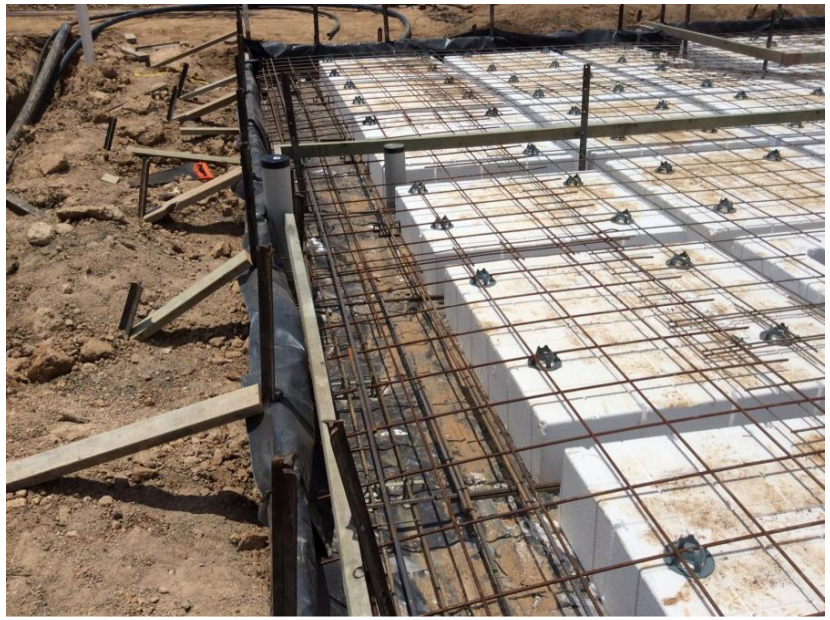

Existing Buildings/Service Excavation

Where proposed footings are near existing buildings or services, the Design Engineer must be contacted as design changes may be necessary.

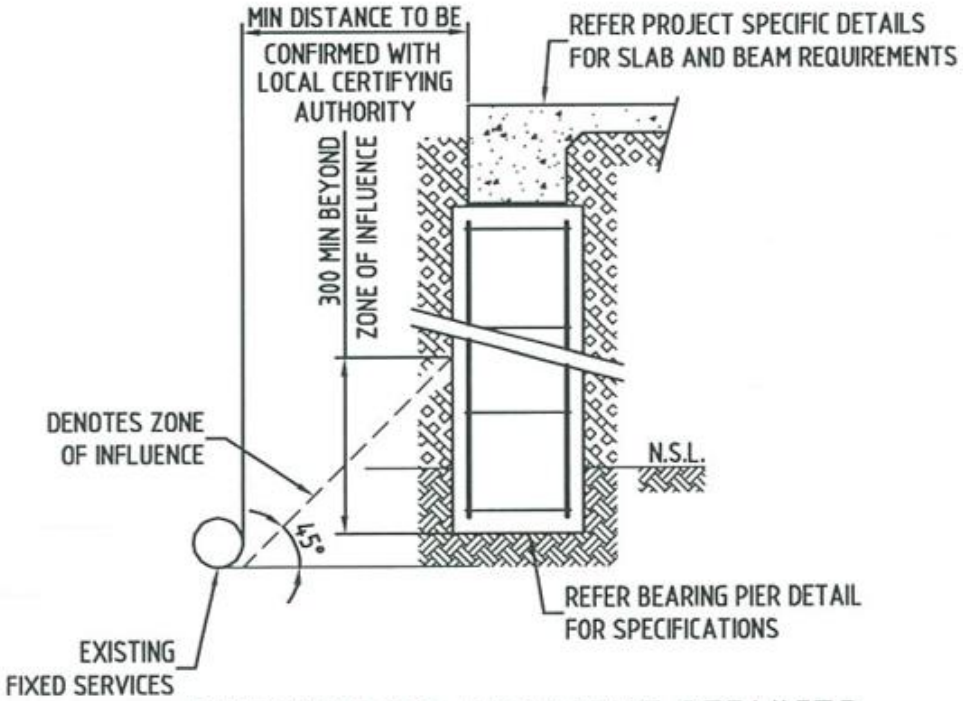

BEARING PIER ADJACENT SERVICES

SCALE = 1:20

barnson
DESIGN.PLAN.MANAGE

Fill

1. Filling used in the construction of a slab, except where the slab is suspended, shall consist of controlled fill as follows:

   Controlled Fill: Minimum 100mm deep, maximum 300mm deep under perimeter footings. It shall be well compacted in 150mm layers by a mechanical roller to a minimum 95% standard compaction for a single storey dwelling, and 98% standard compaction for a double storey dwelling. Fill shall be of less reactivity than natural soil.

2. Fill with a greater depth than that specified above shall be installed and certified by a NATA accredited laboratory in accordance with AS3798-2007, level 2

3. Fill shall be extended past the edge of the residence and shall be retained or battered by a slope

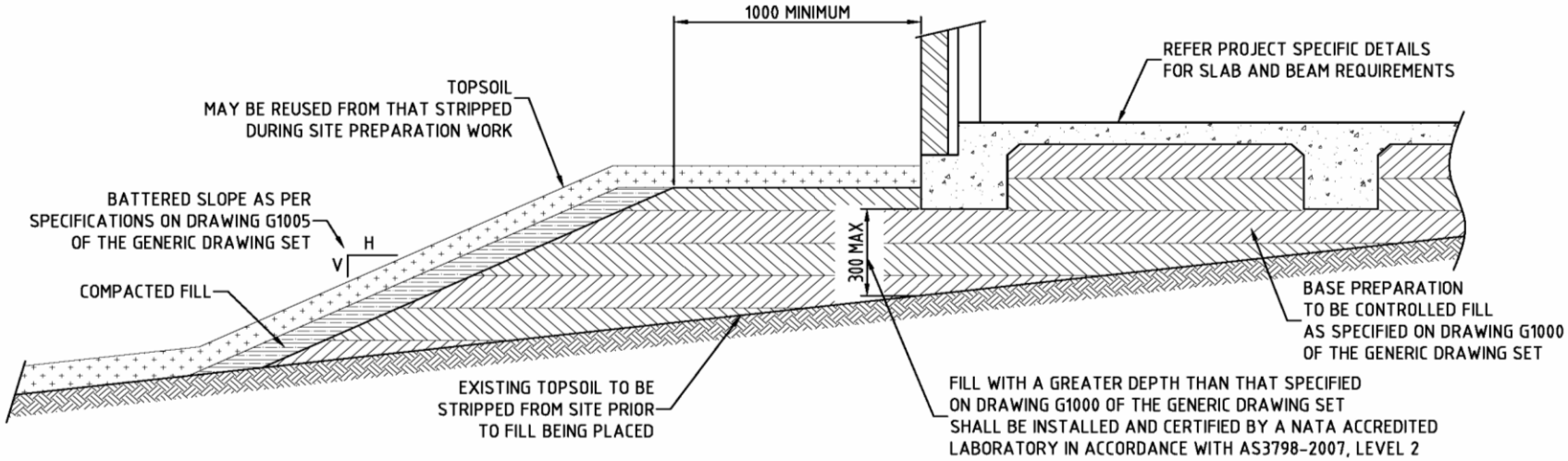

SLAB EDGE & INTERNAL BEAMS FOUNDED IN CONTROLLED FILL

SCALE = 1:20

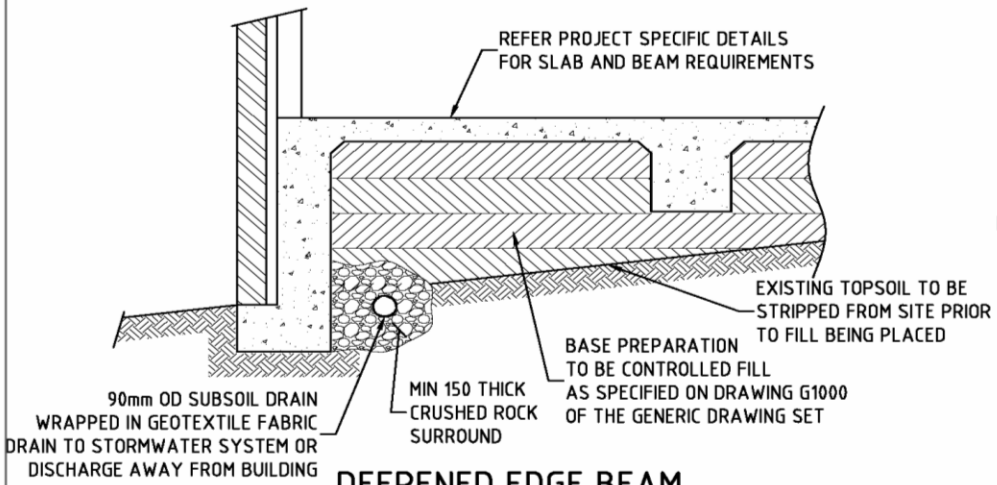

DEEPENED EDGE BEAM FOUNDED IN NATURAL SOIL

SCALE = 1:20

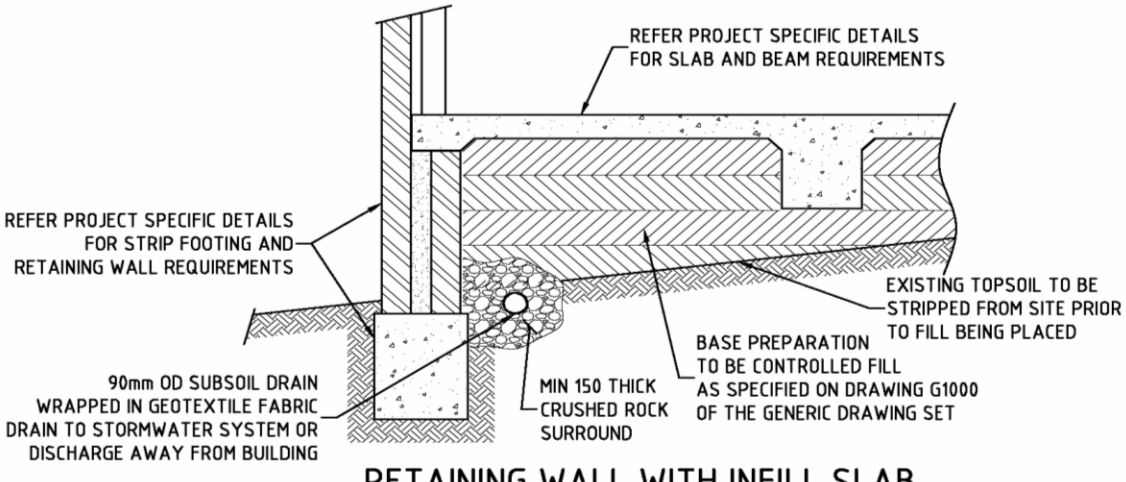

RETAINING WALL WITH INFILL SLAB FOUNDED IN NATURAL SOIL

SCALE = 1:20

barnson
DESIGN.PLAN.MANAGE

Offices Located
Dubbo, Mudgee, Parkes & Bathurst

Contact Us
t 1300 138 657
e generalenquiry@barnson.com.au
w www.barnson.com.au

Dubbo - Head Office

Accredited Laboratories
Dubbo & Bathurst

Client: RESIDENTIAL FOOTING DESIGN GENERIC DRAWING SET

Project:
GENERIC PROJECT REQUIREMENTS
TO AS2870-2011
RAFT SLABS

Drawing Title:
SLOPING SITES
SLAB & FILL REQUIREMENTS

Design	Drawn
NIK	NIK
Check	**QA**
MB	RJN

Drawing Sheet
A3 - Scales as noted

Rev	Date	Amendment
C	01-02-13	SUBSOIL DRAIN ADDED
B	24-02-12	UPDATED TO AS 2870-2011
A	20-09-10	INCLUSION IN GENERIC DRAWING SET

Certification

Drawing Number
G1004

Revision
C

Damp-Proofing Membrane

It shall be installed with minimum 200mm laps at all joints, and taped or sealed with a close fitting sleeve around service penetrations.

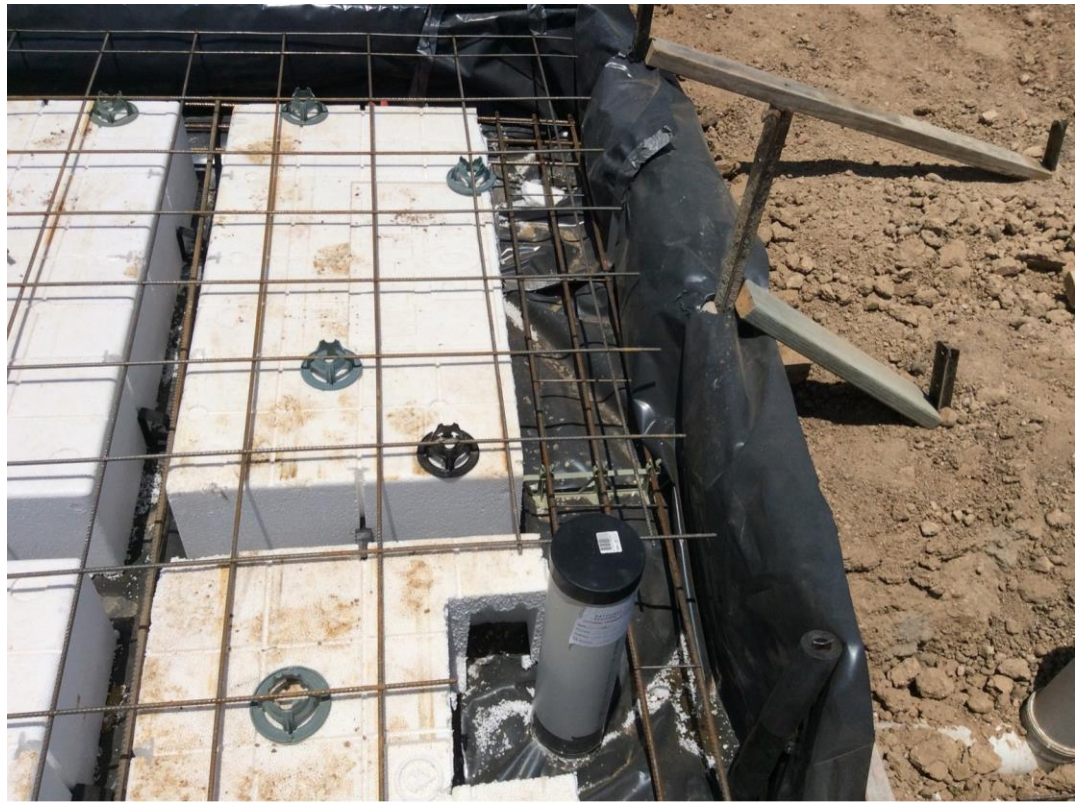

Reinforcement

A. Lapping Bars and Trench Mesh

Trench mesh shall be spliced where necessary by a lap of 500mm
Reinforcement bars to be lapped as follows:

- Mesh-2 outer bars overlapped with 2 outer bars +20mm
- N12 bars = 500mm minimum
- N16 bars = 700mm minimum

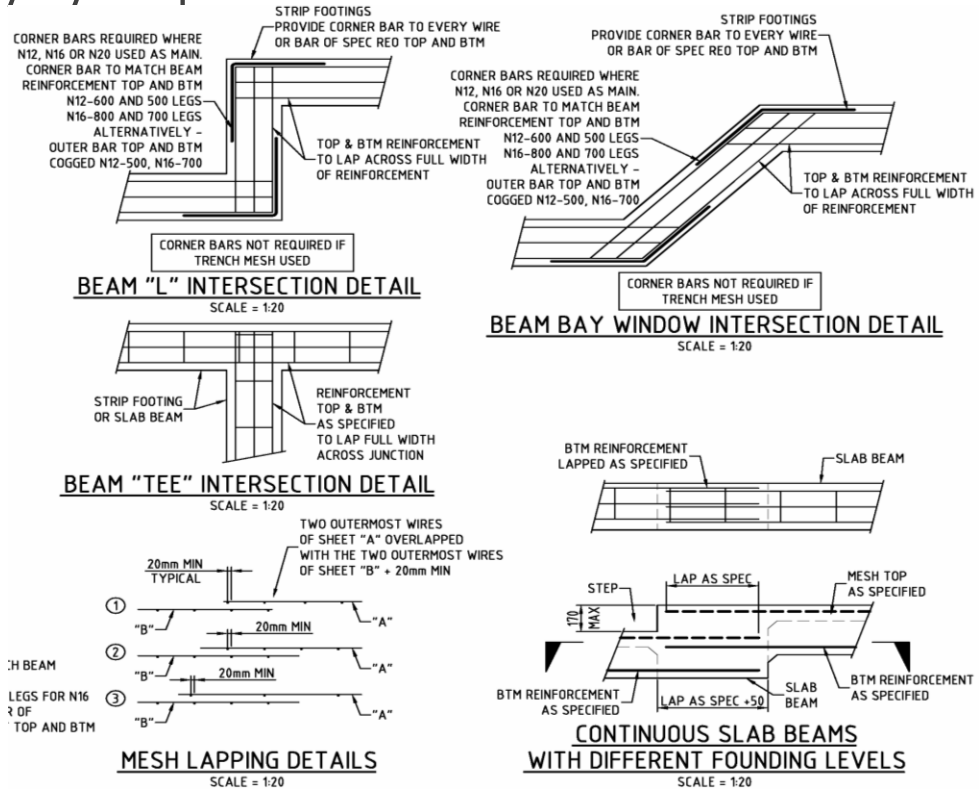

Reinforcement Continued

B. Bar Chairs

All reinforcement is to be adequately supported in its required position. Support chairs are to be at 800mm maximum centres, both directions.

C. Cover

Cover to reinforcement shall be as follows:

I. Waffle pod slab panels = 20mm (top)
II. Raft slab panels = 30mm (top)
III. Waffle pod ribs = 30mm (side)
IV. Waffle and raft slab beams = 50mm (bottom and side)
V. Strip and pad footings = 50mm (all sides)

Service Penetration

Service penetrations shall be approved by Barnson Pty Ltd prior to pouring. All services that penetrate concrete members shall be lagged or sleeved. Please refer to generic drawing G1003 for details.

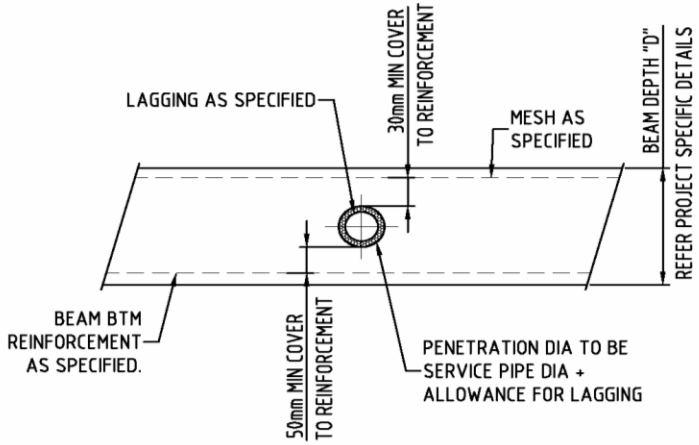

HORIZONTAL SERVICE PIPE PENETRATION THRU MIDDLE THIRD OF BEAM

SCALE = 1:20

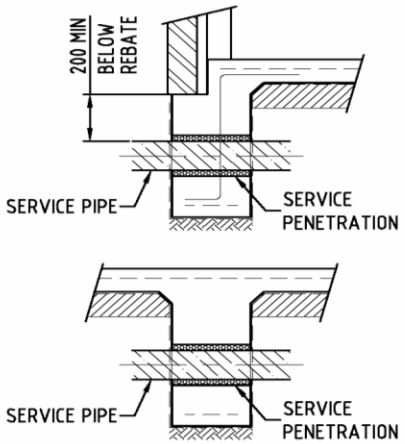

SERVICE PIPE PENETRATION TYPICAL SECTIONS THRU BEAMS

SCALE = 1:20

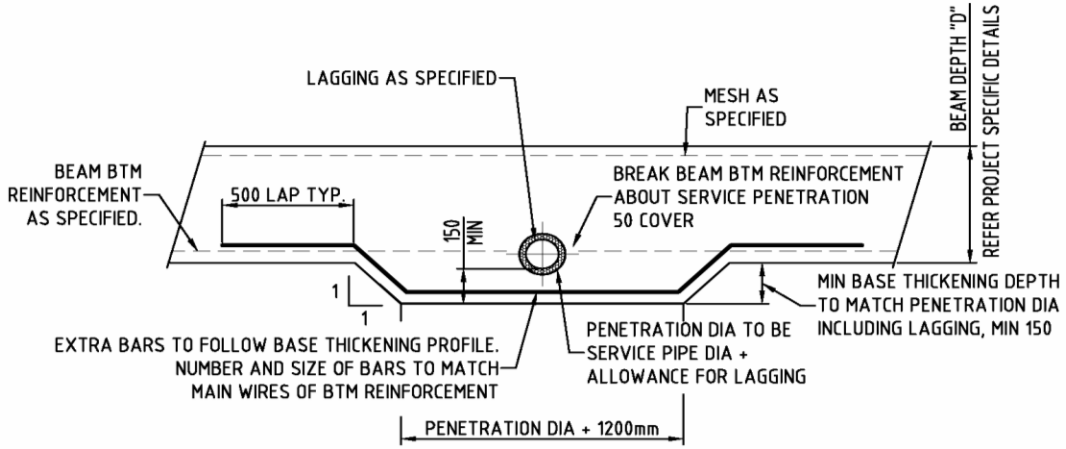

HORIZONTAL SERVICE PIPE PENETRATION THRU LOWER REGION OF BEAM

SCALE = 1:20

SERVICE PENETRATION NOTES

1. HORIZONTAL SERVICE PENETRATIONS AS DEPICTED ARE DESIGNED TO SUIT PIPES UP TO A MAXIMUM DIAMETER OF ONE THIRD OF THE DESIGN BEAM DEPTH. i.e. D/3.
2. ALL HORIZONTAL PIPE PENETRATIONS THROUGH SLAB BEAMS OR RIBS ARE TO BE WRAPPED IN CLOSED CELL POLYETHYLENE LAGGING TO SUIT THE SITE CLASSIFICATION. NO LAGGING IS REQUIRED FOR SITE CLASSIFICATIONS A AND S. LAGGING SHALL BE A MINIMUM 20mm THICK ON CLASS M, M-D, H1 AND H1-D SITES. LAGGING SHALL BE A MINIMUM 40mm THICK ON CLASS H2, H2-D AND E SITES. OR ALTERNATIVELY PROVIDE SLEEVE WITH SIMILAR ALLOWABLE MOVEMENT.
3. LAGGING NOT REQUIRED FOR VERTICAL SERVICE PANEL PENETRATIONS

barnson DESIGN.PLAN.MANAGE
Offices Located
Dubbo, Mudgee, Parkes & Bathurst
Contact Us
t 1300 138 657
e generalenquiry@barnson.com.au
w www.barnson.com.au

Dubbo - Head Office

Accredited Laboratories Dubbo & Bathurst

Client: RESIDENTIAL FOOTING DESIGN GENERIC DRAWING SET

Project: GENERIC PROJECT REQUIREMENTS TO AS2870-2011 RAFT SLABS

Drawing Title: SLAB AND BEAM SERVICE PENETRATION DETAILS

Design	Drawn
NIK	NIK
Check	QA
MB	RJN

Drawing Sheet: A3 - Scales as noted

Rev	Date	Amendment
C	01-02-13	DETAILS AND NOTES UPDATED
B	24-02-12	UPDATED TO AS 2870-2011
A	20-09-10	INCLUSION IN GENERIC DRAWING SET

Certification

Drawing Number: G1003

Revision: C

barnson
DESIGN.PLAN.MANAGE

Saline and Sulphate Soils

In areas advised by the local authority to have aggressive soils, the following minimum requirements are to take precedence over any notation within the drawing set:

A. The damp-proofing membrane shall consist of a suitable 0.5mm thick damp-proofing material complying with AS/NZS 2904 and lapped a minimum of 75mm vertically or horizontally. Damp-proofing membrane is to be installed and terminated at finished ground or paving level

B. Concrete is to be minimum grade N32 (32MPa strength at 28 days age). Actual concrete grade to be utilised on site is to be in accordance with Table 5.3 of AS2870-2011. Table 5.3 is to be read in conjunction with Tables 5.1 and 5.2 of AS2870-2011 for site exposure class for saline or sulphate soils

What can happen…